ABBREVIATIONS
EA: Exhaust Air to Outside
OA: Outside Air Intake
RA: Room Air to be Exhausted
SA: Supply Air to Inside
BP: Bypass Air Outlet
RTR: Rooftop Vertical RA Only
RTV: Rooftop Vertical RA & SA

INSTALLATION ORIENTATION
Unit must be installed in orientation shown.

NOTE
1. UNLESS OTHERWISE SPECIFIED, DIMENSIONS ARE ROUNDED TO THE NEAREST EIGHTH OF AN INCH.
2. SPECIFICATIONS MAY BE SUBJECT TO CHANGE WITHOUT NOTICE.

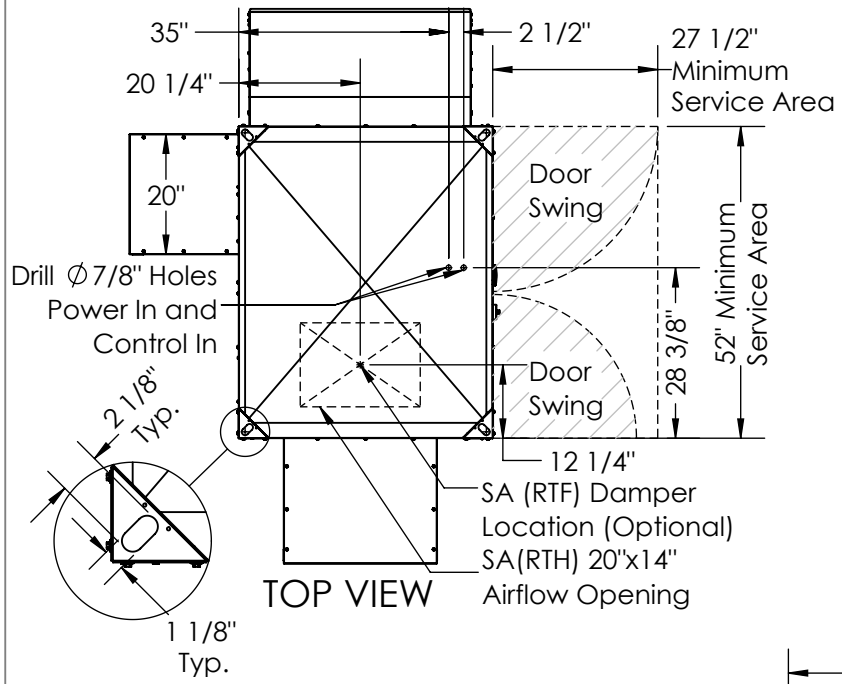

TOP VIEW

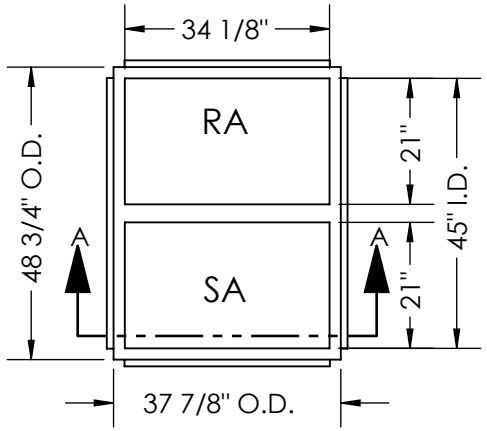

HE20RT CURB

CURB CROSS-SECTION A-A (TYP.)

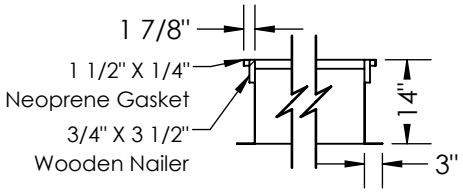

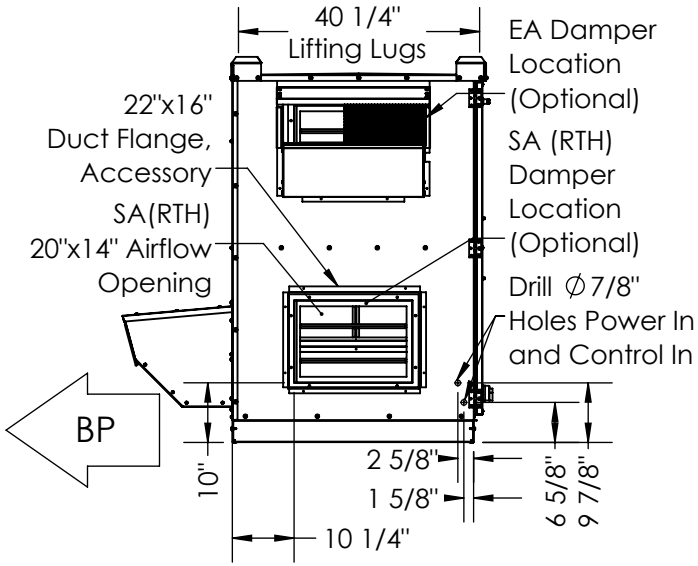

LEFT VIEW

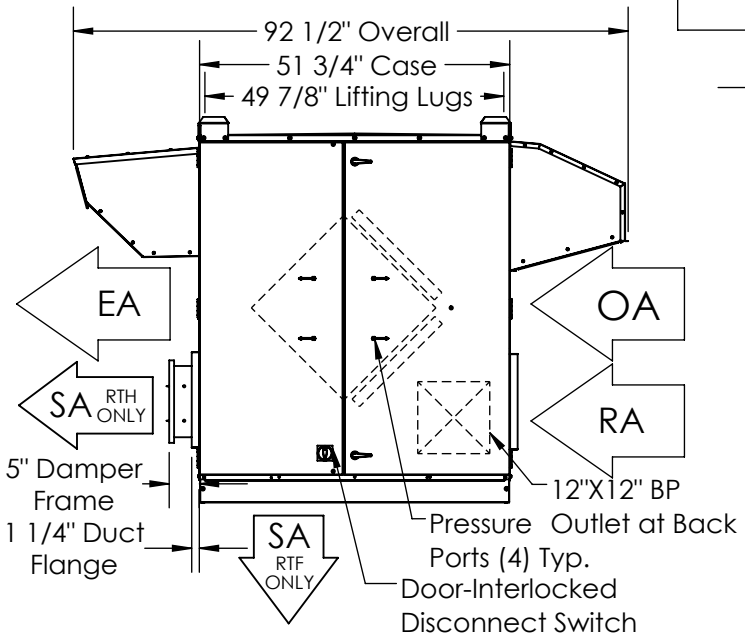

FRONT VIEW

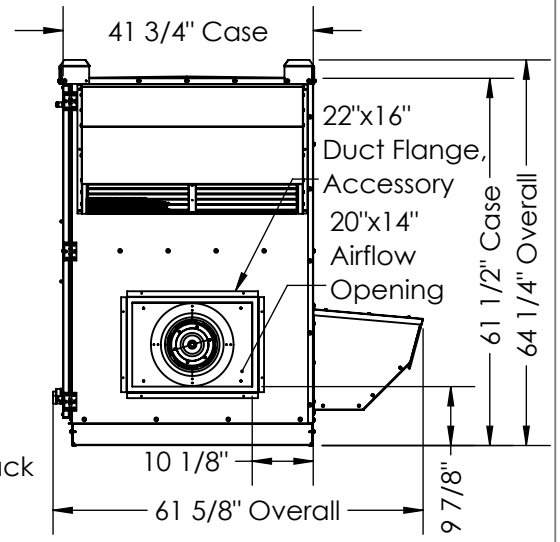

RIGHT VIEW

Model: HE20 RTF/RTH [Bypass]
Drawing Type: Unit Dimension
Version: NOV25

RenewAire®
Energy Recovery Ventilation