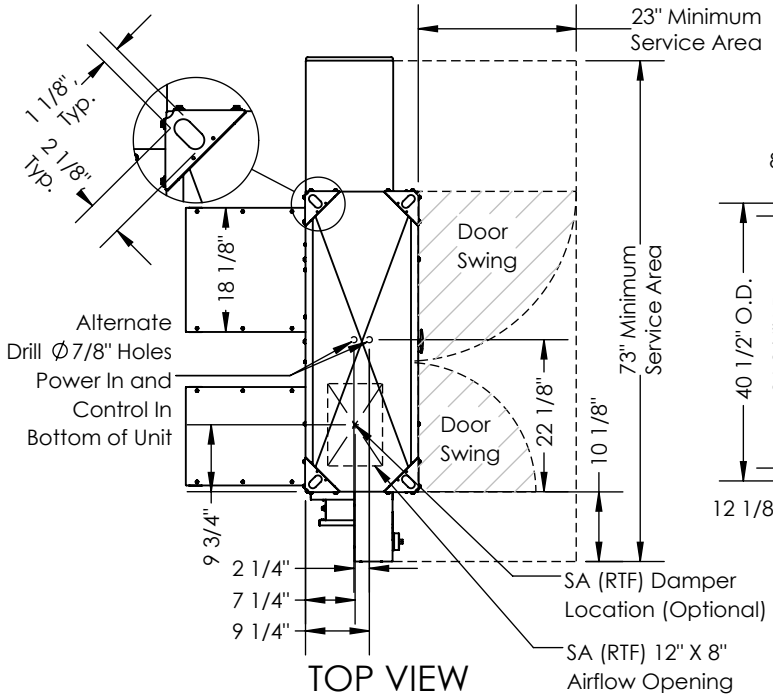

TOP VIEW

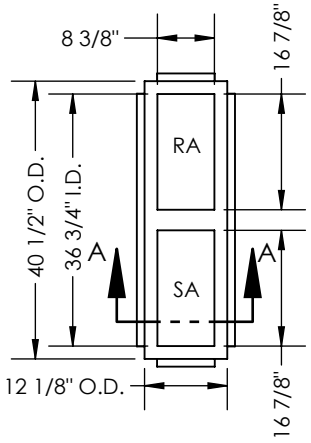

HE07RT CURB

CURB CROSS-SECTION A-A (TYP.)

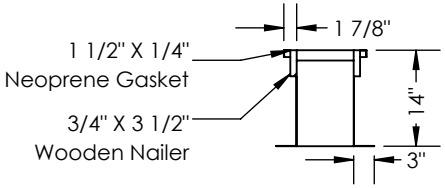

Abbreviations
EA: Exhaust Air to outside
OA: Outside Air intake
RA: Room Air to be exhausted
SA: Supply Air to inside

INSTALLATION ORIENTATION
Unit may be installed in any orientation.

NOTE
1. UNLESS OTHERWISE SPECIFIED, DIMENSIONS ARE ROUNDED TO THE NEAREST EIGHTH OF AN INCH.

2. SPECIFICATIONS MAY BE SUBJECT TO CHANGE WITHOUT NOTICE.

UNITS WITH BYPASS
1. WILL REQUIRE ADDITIONAL SPACE FOR THE CONNECTION OF THE BYPASS DUCT (BY OTHERS).

2. FOR INSTALLATION DETAILS, REFER TO I&O MANUAL SUPPLEMENT FOR BYPASS.

3. BYPASS DAMPER SHIPPED LOOSE, FIELD INSTALLATION REQUIRED.

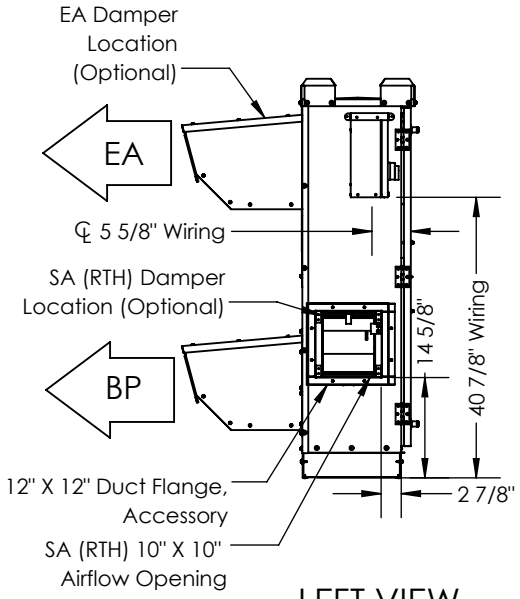

LEFT VIEW

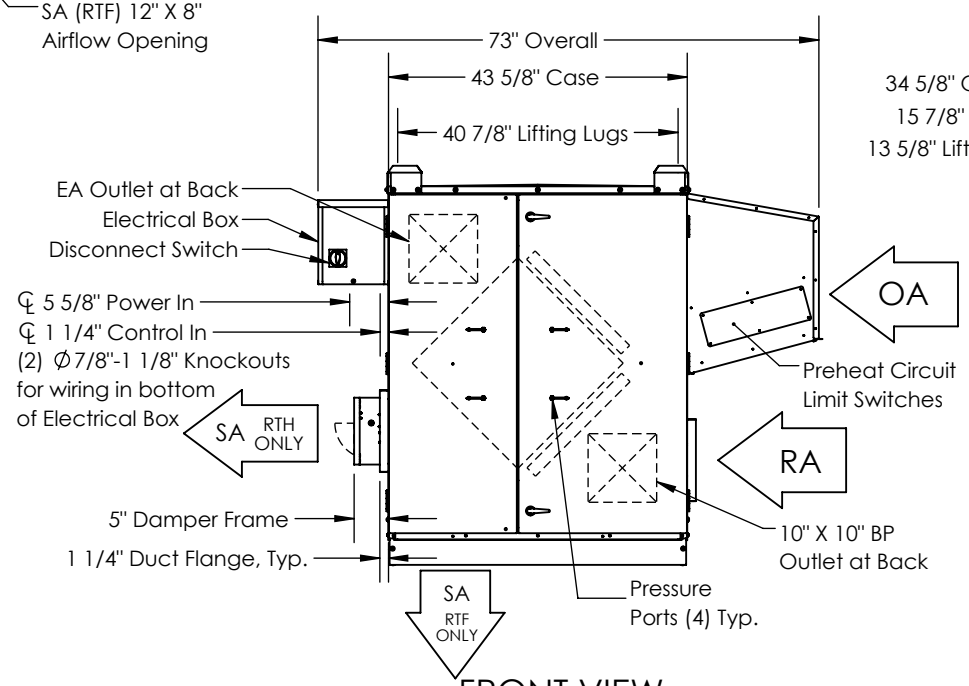

FRONT VIEW

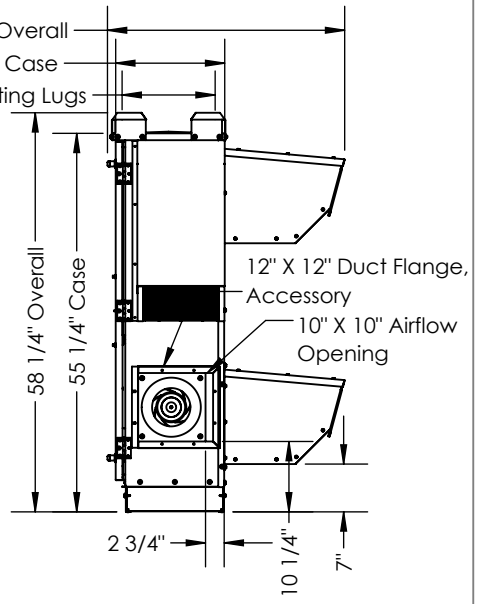

RIGHT VIEW

Model: HE07 RTF/RTH [Bypass][Preheat]
Drawing Type: Unit Dimension
Version: JUL26

RenewAire®
Energy Recovery Ventilation